PROPRIETARY

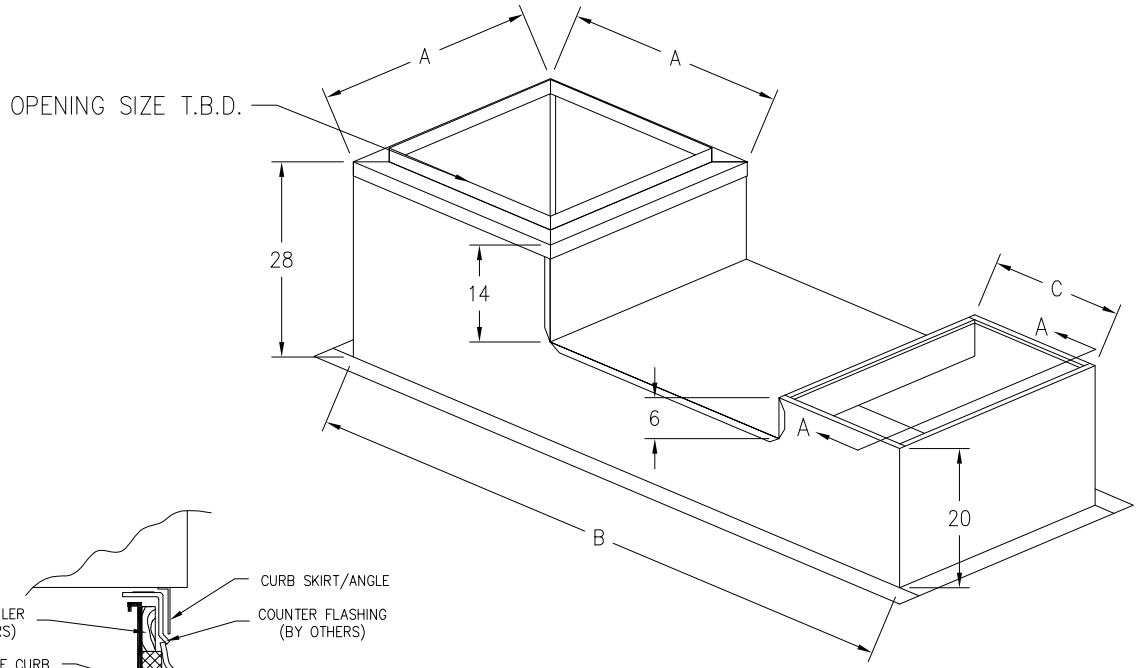

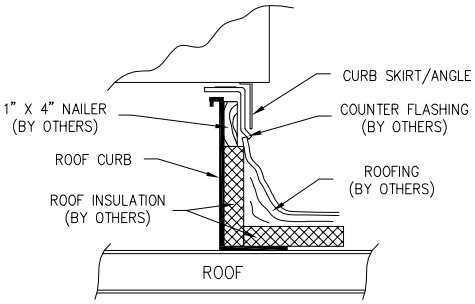

MOUNTING DETAIL FOR ROOF CURB

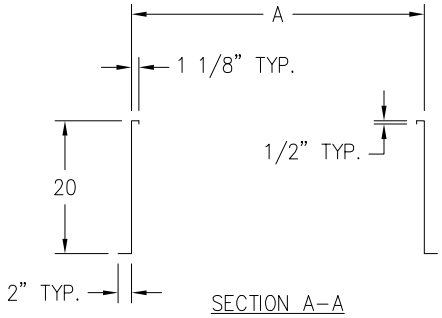

SECTION A–A

MODEL	A	B	C	WEIGHT ALZD.
AA1700 & V1	24"	100"	24"	170#
AA3000 & V2	28"	90"	28"	170#
AA1,2 & V3	36"	96"	36"	210#
AA3 & V4	44"	108"	36"	260#
AA4 & V5	51"	116"	42"	300#
AA5,6	70"	132"	48"	550#

LAST REVISION: MODIFIED DIRECTION OF A–A LEADER ARROWS

NOTES:

ALL 0–LINES (OR 0,0) WILL ALWAYS BE IN THE LOWER LEFT–HAND CORNER OF THE PART

DRAWING FILE LOCATION: T:\VS\VCURB

REV.	ECO#	DATE	CK BY
A	–	11–21–07	AMB
B	–	03–28–08	AMB
C	–	11–19–15	AMB
–	–	–	–
–	–	–	–

PART #: –

–	–	–
NET QTY	MATERIAL	MATERIAL SIZE

Absolut Aire, Inc.
5496 North Riverview Dr., Kalamazoo MI 49004

DESC. AA & V–SERIES – FULL, FLAT COMMON CURB ASSEMBLY (WELDED)

SCALE NONE	DRAWN BY: AMB	DATE: 02–13–07	REV.	FILE NO.:
PLOT RATIO: 1=28	CK BY: –	WO# –	C	AAV–CCW