air-turbine-propeller

412-452-9540

TYPE X

24 in.

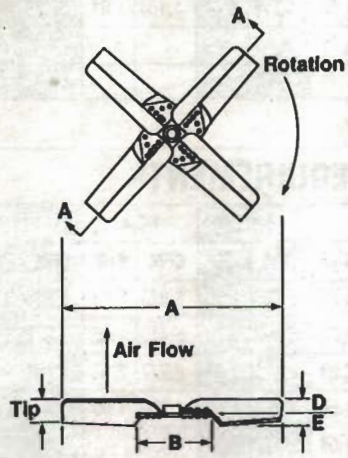

CATALOG NUMBER	A	B	D	E	TIP
X-24-11	24	7	2	1 5/16	2 1/2
X-24-10	24	7	1 7/8	1 1/4	2 3/8
X-24-9	24	7	1 3/4	1 3/16	2 1/4
X-24-8	24	7	1 5/8	1 1/8	2 1/8
X-24-7	24	7	1 1/2	1 1/16	2
X-24-6	24	7	1 3/8	1	1 7/8
X-24-5	24	7	1 1/4	15/16	1 3/4
X-24-4	24	7	1 13/16	3/4	1 1/2

Std. Blade Thickness — 14 gauge
Std. Hub Thickness — 1/4 inch

METHOD OF RATING

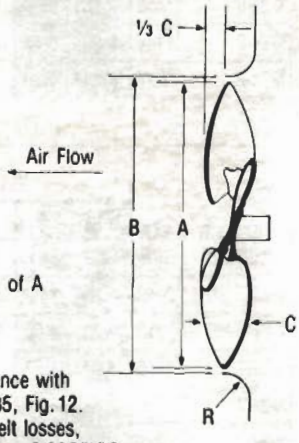

A — Fan Diameter
B — Orifice Diameter 102% of A
C — Fan Depth
R — 10% of A

Fans were tested in accordance with AMCA 210-85/ASHRAE 51-85, Fig. 12. BHP does not include any belt losses, all fans are rated at STD. air — 0.075#/Ft³.

CUBIC FEET PER MINUTE AND HORSEPOWER REQUIREMENTS

CATALOG NUMBER	FAN RPM	FREE AIR		1/8		1/4		3/8		1/2		3/4		1		1-1/4		1-1/2		1-3/4		2	
		CFM	BHP	CFM	BHP	CFM	BHP	CFM	BHP	CFM	BHP	CFM	BHP	CFM	BHP	CFM	BHP	CFM	BHP	CFM	BHP	CFM	BHP
X-24-11 HD	2000	11,489	4.00	11,186	4.06	10,883	4.13	10,580	4.20	10,310	4.28	9,770	4.45	8,818	4.60	7,290	4.58	6,197	4.71	5,404	4.88	4,736	5.11
X-24-11 HD	1750	10,052	2.68	9,706	2.73	9,360	2.79	9,039	2.86	8,757	2.94	7,784	3.07	6,138	3.09	5,022	3.20	4,228	3.39	3,483	3.61	2,761	3.84
X-24-11 HD	1580	9,076	1.97	8,693	2.02	8,309	2.07	7,988	2.14	7,565	2.21	5,976	2.25	4,609	2.34	3,736	2.52	2,858	2.71	2,157	2.93	1,474	3.16
X-24-11	1250	7,180	0.97	6,696	1.01	6,271	1.06	5,606	1.11	4,464	1.12	3,077	1.22	2,044	1.38	1,172	1.56	378	1.75				
X-24-11	1140	6,548	0.74	6,017	0.77	5,527	0.82	4,482	0.85	3,454	0.87	2,226	1.00	1,214	1.16	337	1.33						
X-24-11	860	4,940	0.31	4,284	0.35	2,920	0.36	2,008	0.40	1,269	0.46	82	0.59										

CUBIC FEET PER MINUTE AND HORSEPOWER REQUIREMENTS

CATALOG NUMBER	FAN RPM	FREE AIR		1/8		1/4		3/8		1/2		3/4		1		1-1/4		1-1/2		1-3/4		2	
		CFM	BHP	CFM	BHP	CFM	BHP	CFM	BHP	CFM	BHP	CFM	BHP	CFM	BHP	CFM	BHP	CFM	BHP	CFM	BHP	CFM	BHP
X-24-10 HD	2060	11,245	3.98	11,009	4.02	10,773	4.06	10,535	4.11	10,286	4.23	9,722	4.43	9,066	4.58	7,688	4.65	6,314	4.76	5,739	4.89	5,119	5.11
X-24-10 HD	1850	10,099	2.88	9,836	2.92	9,573	2.95	9,300	3.04	9,021	3.15	8,330	3.29	6,954	3.37	5,572	3.46	4,909	3.61	4,242	3.82	3,612	4.04
X-24-10 HD	1750	9,554	2.44	9,275	2.47	8,997	2.50	8,705	2.61	8,380	2.69	7,518	2.81	5,893	2.89	4,913	2.98	4,188	3.18	3,523	3.38	2,848	3.59
X-24-10	1295	7,069	0.99	6,694	1.01	6,295	1.08	5,802	1.13	4,780	1.15	3,377	1.24	2,455	1.39	1,575	1.55	907	1.74	206	1.94		
X-24-10	1140	6,223	0.67	5,794	0.70	5,289	0.75	4,332	0.78	3,333	0.81	2,265	0.94	1,282	1.08	522	1.25						
X-24-10	860	4,695	0.29	4,093	0.32	2,783	0.34	1,989	0.38	1,306	0.43	229	0.55										

CUBIC FEET PER MINUTE AND HORSEPOWER REQUIREMENTS

CATALOG NUMBER	FAN RPM	FREE AIR		1/8		1/4		3/8		1/2		3/4		1		1-1/4		1-1/2		1-3/4		2	
		CFM	BHP	CFM	BHP	CFM	BHP	CFM	BHP	CFM	BHP	CFM	BHP	CFM	BHP	CFM	BHP	CFM	BHP	CFM	BHP	CFM	BHP
X-24-9 HD	2240	11,652	4.00	11,439	4.07	11,226	4.15	11,013	4.22	10,797	4.32	10,366	4.51	9,848	4.71	9,228	4.91	7,777	5.08	6,709	5.09	5,813	5.24
X-24-9 HD	2030	10,559	2.98	10,324	3.04	10,090	3.11	9,853	3.18	9,615	3.27	9,118	3.45	8,442	3.63	6,961	3.78	5,810	3.82	5,047	4.00	4,512	4.27
X-24-9 HD	1750	9,103	1.91	8,830	1.96	8,557	2.02	8,281	2.10	8,005	2.18	7,256	2.33	5,612	2.42	4,472	2.52	3,855	2.74	3,202	2.97	2,503	3.19
X-24-9	1450	7,542	1.08	7,214	1.13	6,881	1.19	6,542	1.25	6,069	1.32	4,242	1.38	3,285	1.54	2,467	1.72	1,763	1.91	1,158	2.10	600	2.30
X-24-9	1140	5,930	0.52	5,510	0.56	5,056	0.61	4,130	0.67	3,056	0.68	2,050	0.82	1,159	0.97	435	1.12						
X-24-9	860	4,473	0.22	3,915	0.26	2,664	0.28	1,829	0.33	1,160	0.38	191	0.50										

CUBIC FEET PER MINUTE AND HORSEPOWER REQUIREMENTS

CATALOG NUMBER	FAN RPM	FREE AIR		1/8		1/4		3/8		1/2		3/4		1		1-1/4		1-1/2		1-3/4		2	
		CFM	BHP	CFM	BHP	CFM	BHP	CFM	BHP	CFM	BHP	CFM	BHP	CFM	BHP	CFM	BHP	CFM	BHP	CFM	BHP	CFM	BHP
X-24-8 HD	2325	11,482	4.00	11,267	4.09	11,052	4.17	10,837	4.26	10,622	4.35	10,209	4.53	9,772	4.74	9,213	4.92	8,248	5.09	6,991	5.05	6,077	5.23
X-24-8 HD	2110	10,420	2.99	10,183	3.07	9,946	3.15	9,709	3.23	9,478	3.31	9,025	3.47	8,439	3.67	7,414	3.81	6,108	3.81	5,128	3.98	4,756	4.28
X-24-8 HD	1750	8,642	1.70	8,356	1.77	8,071	1.83	7,793	1.90	7,520	1.97	6,795	2.11	5,221	2.15	4,170	2.32	3,722	2.56	3,182	2.73	2,480	2.92
X-24-8	1450	7,161	0.97	6,816	1.02	6,477	1.08	6,139	1.14	5,692	1.19	3,954	1.25	3,149	1.43	2,466	1.58	1,715	1.74	1,154	1.91	555	2.09
X-24-8	1140	5,630	0.47	5,191	0.51	4,752	0.56	3,914	0.60	2,837	0.62	2,040	0.76	1,126	0.88	390	1.02						
X-24-8	860	4,247	0.20	3,677	0.23	2,482	0.25	1,782	1.31	1,142	0.35	122	0.45										

CUBIC FEET PER MINUTE AND HORSEPOWER REQUIREMENTS

CATALOG NUMBER	FAN RPM	FREE AIR		1/8		1/4		3/8		1/2		3/4		1		1-1/4		1-1/2		1-3/4		2	
		CFM	BHP	CFM	BHP	CFM	BHP	CFM	BHP	CFM	BHP	CFM	BHP	CFM	BHP	CFM	BHP	CFM	BHP	CFM	BHP	CFM	BHP
X-24-7 HD	2440	11,262	3.99	11,031	4.06	10,800	4.13	10,569	4.20	10,326	4.29	9,815	4.50	9,303	4.71	8,258	4.77	7,528	4.90	6,823	5.03	6,226	5.25
X-24-7 HD	2210	10,200	2.96	9,945	3.03	9,690	3.09	9,432	3.16	9,150	3.25	8,585	3.45	7,618	3.54	6,758	3.65	5,992	3.78	5,410	4.00	5,021	4.21
X-24-7 HD	1750	8,077	1.47	7,755	1.52	7,427	1.57	7,070	1.65	6,714	1.73	5,484	1.80	4,556	1.92	3,984	2.09	3,475	2.34	2,777	2.52	2,158	2.70
X-24-7	1500	6,923	0.92	6,547	0.97	6,145	1.02	5,729	1.09	4,934	1.11	3,849	1.21	3,224	1.37	2,500	1.56	1,766	1.72	1,209	1.90	714	2.09
X-24-7	1220	5,631	0.49	5,163	0.53	4,652	1.59	3,764	0.61	3,113	0.65	2,350	0.80	1,411	0.93	753	1.08	177	1.24				
X-24-7	860	3,969	0.17	3,275	0.20	2,184	0.23	1,643	0.28	980	0.32	110	0.43										

CUBIC FEET PER MINUTE AND HORSEPOWER REQUIREMENTS

CATALOG NUMBER	FAN RPM	FREE AIR		1/8		1/4		3/8		1/2		3/4		1		1-1/4		1-1/2		1-3/4		2	
		CFM	BHP	CFM	BHP	CFM	BHP	CFM	BHP	CFM	BHP	CFM	BHP	CFM	BHP	CFM	BHP	CFM	BHP	CFM	BHP	CFM	BHP
X-24-6 HD	2540	11,008	3.96	10,781	4.03	10,555	4.09	10,329	4.15	10,102	4.22	9,619	4.44	9,135	4.66	8,272	4.80	7,433	4.95	6,802	5.15	6,336	5.27
X-24-6 HD	2310	10,011	2.98	9,762	3.04	9,513	3.10	9,264	3.15	9,005	3.24	8,472	3.44	7,657	3.59	6,734	3.73	6,075	3.90	5,568	4.01	5,167	4.20
X-24-6 HD	1750	7,584	1.29	7,256	1.34	6,926	1.38	6,574	1.46	6,186	1.53	4,982	1.64	4,230	1.74	3,724	1.90	3,197	2.11	2,614	2.31	1,960	2.45
X-24-6	1450	6,284	0.73	5,887	0.77	5,472	0.82	4,926	0.88	4,194	0.92	3,329	1.01	2,727	1.18	1,986	1.32	1,298	1.47	773	1.64	288	1.81
X-24-6	1140	4,941	0.35	4,430	0.39	3,727	0.43	2,958	0.47	2,513	0.51	1,668	0.64	807	0.75	192	0.88						
X-24-6	860	3,727	0.15	2,995	0.18	2,032	0.20	1,514	0.25	883	0.29	18	0.39										

CUBIC FEET PER MINUTE AND HORSEPOWER REQUIREMENTS

CATALOG NUMBER	FAN RPM	FREE AIR		1/8		1/4		3/8		1/2		3/4		1		1-1/4		1-1/2		1-3/4		2	
		CFM	BHP	CFM	BHP	CFM	BHP	CFM	BHP	CFM	BHP	CFM	BHP	CFM	BHP	CFM	BHP	CFM	BHP	CFM	BHP	CFM	BHP
X-24-5 HD	2585	10,132	2.98	9,926	3.05	9,720	3.11	9,512	3.18	9,291	3.31	8,850	3.57	8,258	3.75	7,594	3.88	6,946	4.02	6,328	4.17	5,806	4.38
X-24-5 HD	2260	8,858	1.99	8,623	2.05	8,387	2.10	8,138	2.20	7,885	2.32	7,263	2.49	6,507	2.61	5,765	2.73	5,145	2.90	4,574	3.09	4,296	3.34
X-24-5	1750	6,859	0.92	6,555	0.96	6,236	1.04	5,910	1.13	5,426	1.17	4,462	1.27	3,673	1.40	3,254	1.59	2,694	1.80	2,103	1.94	1,493	2.11
X-24-5	1450	5,683	0.52	5,314	0.56	4,920	0.63	4,344	0.68	3,766	0.71	2,883	0.83	2,313	1.00	1,591	1.13	957	1.27	497	1.42	49	1.58
X-24-5	1140	4,468	0.25	3,986	0.29	3,309	0.33	2,627	0.37	2,187	0.42	1,341	0.54	576	0.65	7	0.77						
X-24-5	860	3,371	0.11	2,632	0.14	1,752	0.16	1,265	0.21	670	0.25												

CUBIC FEET PER MINUTE AND HORSEPOWER REQUIREMENTS

CATALOG NUMBER	FAN RPM	FREE AIR		1/8		1/4		3/8		1/2		3/4		1		1-1/4		1-1/2		1-3/4		2	
		CFM	BHP	CFM	BHP	CFM	BHP	CFM	BHP	CFM	BHP	CFM	BHP	CFM	BHP	CFM	BHP	CFM	BHP	CFM	BHP	CFM	BHP
X-24-4 HD	2880	9,849	2.99	9,651	3.09	9,452	3.19	9,253	3.29	9,055	3.39	8,657	3.59	8,260	3.78	7,797	3.94	7,251	4.05	6,785	4.22	5,244	4.80
X-24-4 HD	2515	8,601	1.99	8,374	2.08	8,146	2.16	7,919	2.25	7,691	2.34	7,236	2.51	6,692	2.64	6,105	2.76	4,588	3.19	4,497	3.21	4,400	3.22
X-24-4 HD	1995	6,823	0.99	6,536	1.06	6,249	1.13	5,962	1.20	5,676	1.27	4,941	1.36	3,614	1.59	3,499	1.61	3,143	1.83	2,694	2.01	2,166	2.15
X-24-4	1750	5,985	0.67	5,658	0.73	5,331	0.79	5,004	0.85	4,599	0.89	3,180	1.07	3,022	1.10	2,563	1.30	2,001	1.43	1,396	1.56	937	1.71
X-24-4	1450	4,959	0.38	4,564	0.43	4,170	0.48	3,673	0.51	2,645	0.61	2,373	0.67	1,752	0.80	1,049	0.91	510	1.04	39	1.17		
X-24-4	1140	3,899	0.18	3,397	0.22	2,800	0.25	2,026	0.30	1,767	0.34	888	0.43	227	0.53								