PROPRIETARY

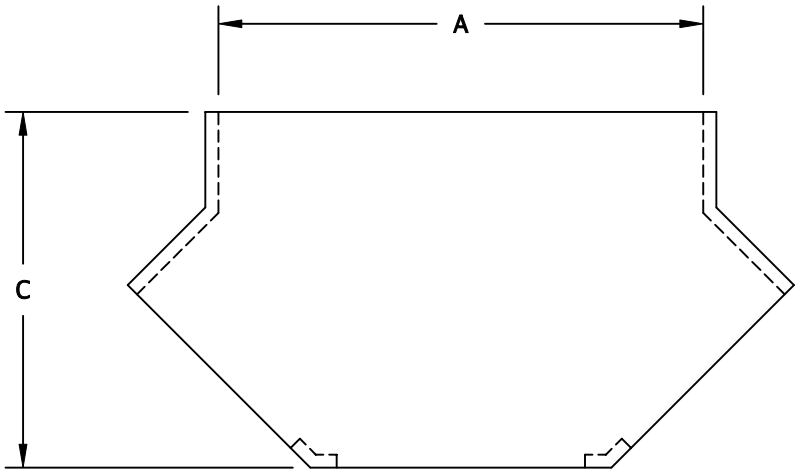

PLAN VIEW

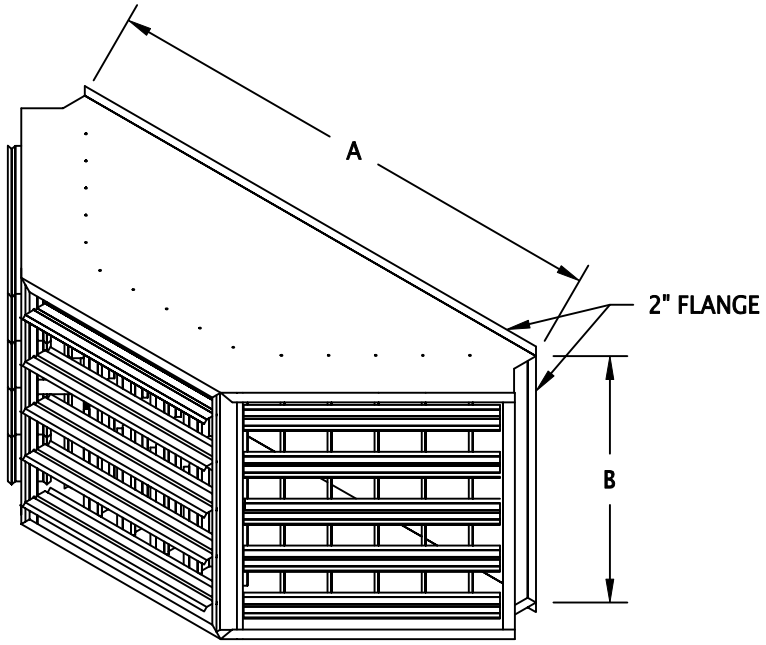

ISOMETRIC VIEW

NOTE: A & B ARE INSIDE DUCT DIMENSIONS

R300 & R400 SERIES
DOUBLE DEFLECTION 180° DISCHARGE DIFFUSER

FAN SIZE	27	30 & 36	40	44 & 49	54	60	66	73	80	89
A	44 1/4	54 1/4	62 1/4	72 1/4	80 1/4	86 1/4	95 1/4	106 1/4	116 1/4	123 1/4
B	24 1/4	30 1/4	35 1/4	40 1/4	46 1/4	48 1/4	55 1/4	55 1/4	62 1/4	70 1/4
C	28 1/8	31	33 3/8	36 1/4	38 5/8	40 3/8	43	46 1/4	49 1/8	51 1/4
WEIGHT	140	210	290	325	400	450	525	550	725	850

ABSOLUTAIRE, INC.

5496 N. RIVERVIEW DR.
KALAMAZOO, MICHIGAN 49004
PH.: (269) 382-1875 FAX: (269) 382-5291

DATE: rev. 10-12-04 BY: AMB

DWG NO.: 10001019